FORMULA 20 — HYDRAULIC GEAR PUMPS ITALIAN STANDARD — 43 T0 - P

GAS STRAIGHT THREAD PORTS
British standard pipe parallel (55°) conforms to UNI - ISO 228

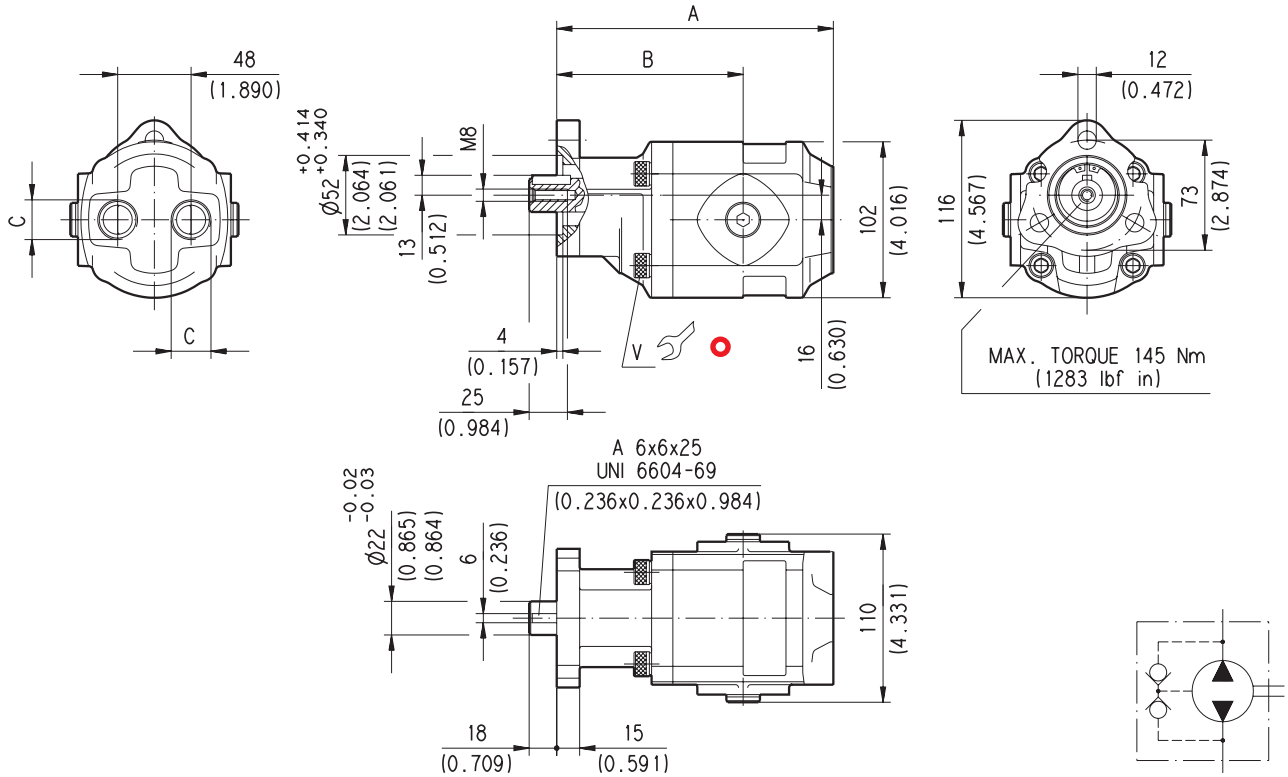

Standard version pumps have reversible rotation and internal drain.

The version with rear ports allow, removing the lateral plugs all possible combination ports.

V Tightening torque Nm (lbf in)
70 ±7 (558 ÷ 682)

Pump type		A mm (in)	B mm (in)	C	Mass kg (lbs)
FP 20•16	B0-43 T0-P GD/GD-N	142 (5.591)	112,5 (4.429)	G 1/2	5,2 (11.47)
FP 20•20		148,5 (5.846)	119 (4.685)		5,3 (11.69)
FP 20•25	B0-43 T0-P GE/GE-N	156,5 (6.161)	112 (4.409)	G 3/4	5,9 (13.01)
FP 20•31,5	B0-43 T0-(L)P GE/GE-N	166,5 (6.555)	122 (4.803)		6 (13.23)
FP 20•40		178 (7.008)	122 (4.803)		6,6 (14.55)

How to order:

FP 20•16 B0 - 43 T0 - P GD/GD - N

01/08.05