FORMULA 20 — HYDRAULIC GEAR PUMPS ISO STANDARD — 16 Z0

GAS STRAIGHT THREAD PORTS
British standard pipe parallel (55°) conforms to UNI - ISO 228

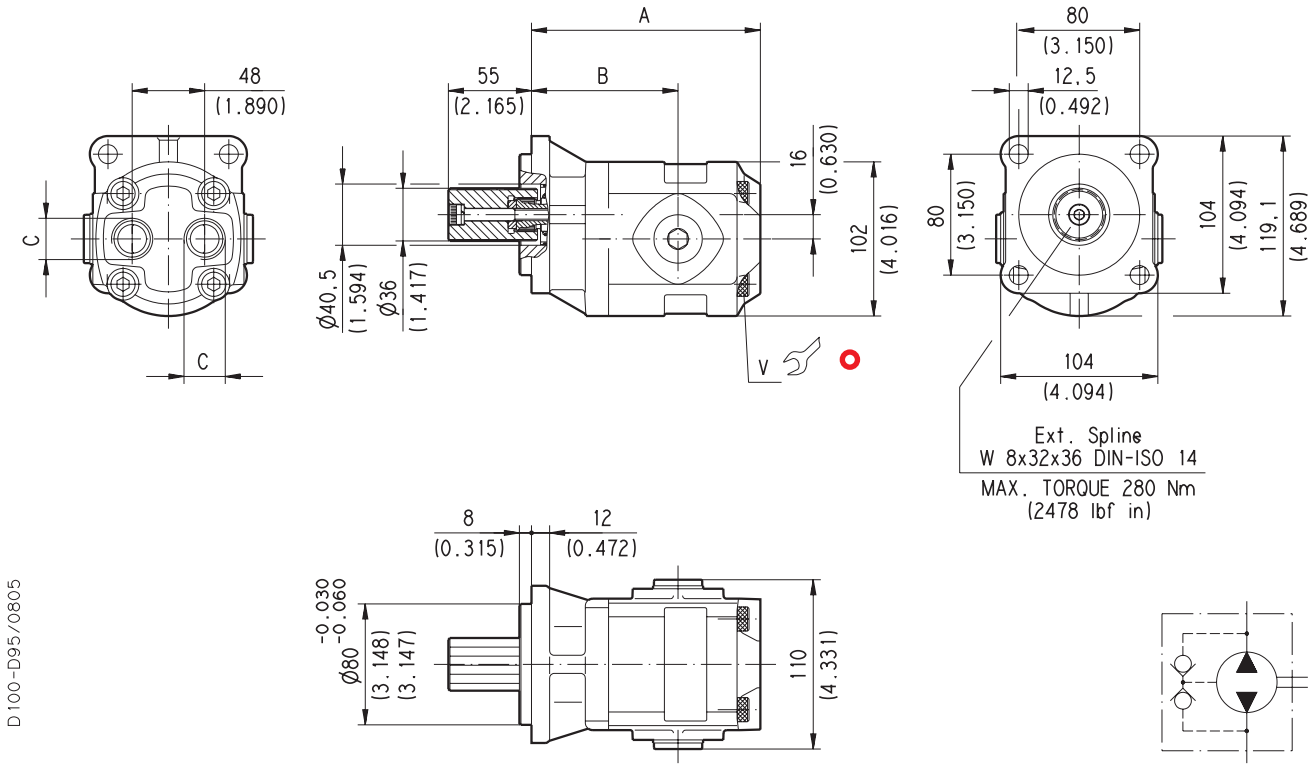

Radial and/or axial load are not allowed.

Standard version pumps have reversible rotation and internal drain.

The drawing shows the version with rear ports.
Removing the lateral plugs all possible combination ports are allowed.

V Tightening torque Nm (lbf in)
70 ±7 (558 ÷ 682)

Pump type		A mm (in)	B mm (in)	C	Mass kg (lbs)
FP 20•8	B0-16 Z0-LP GD/GD-N	104 (4.094)	80 (3.150)	G 1/2	5,31 (11.71)
FP 20•11,2		107,5 (4.232)	83,5 (3.287)		5,70 (12.57)
FP 20•16		117 (4.606)	87,5 (3.445)		6,00 (13.23)
FP 20•20		123,5 (4.862)	94 (3.701)		6,35 (14.00)
FP 20•25	B0-16 Z0-LP GE/GE-N	131,5 (5.177)	87 (3.425)	G 3/4	6,80 (14.99)
FP 20•31,5		141,5 (5.571)	97 (3.819)		7,18 (15.83)
FP 20•36		146,4 (5.764)	91,4 (3.598)		7,44 (16.41)
FP 20•40		151,5 (5.965)	97 (3.819)		7,80 (17.20)

How to order:

FP 20•8 B0 - 16 Z0 - LP GD/GD - N

01/08.05