FORMULA 30 — HYDRAULIC GEAR PUMPS ISO STANDARD — 16 Z0

GAS STRAIGHT THREAD PORTS
British standard pipe parallel (55°) conforms to UNI - ISO 228

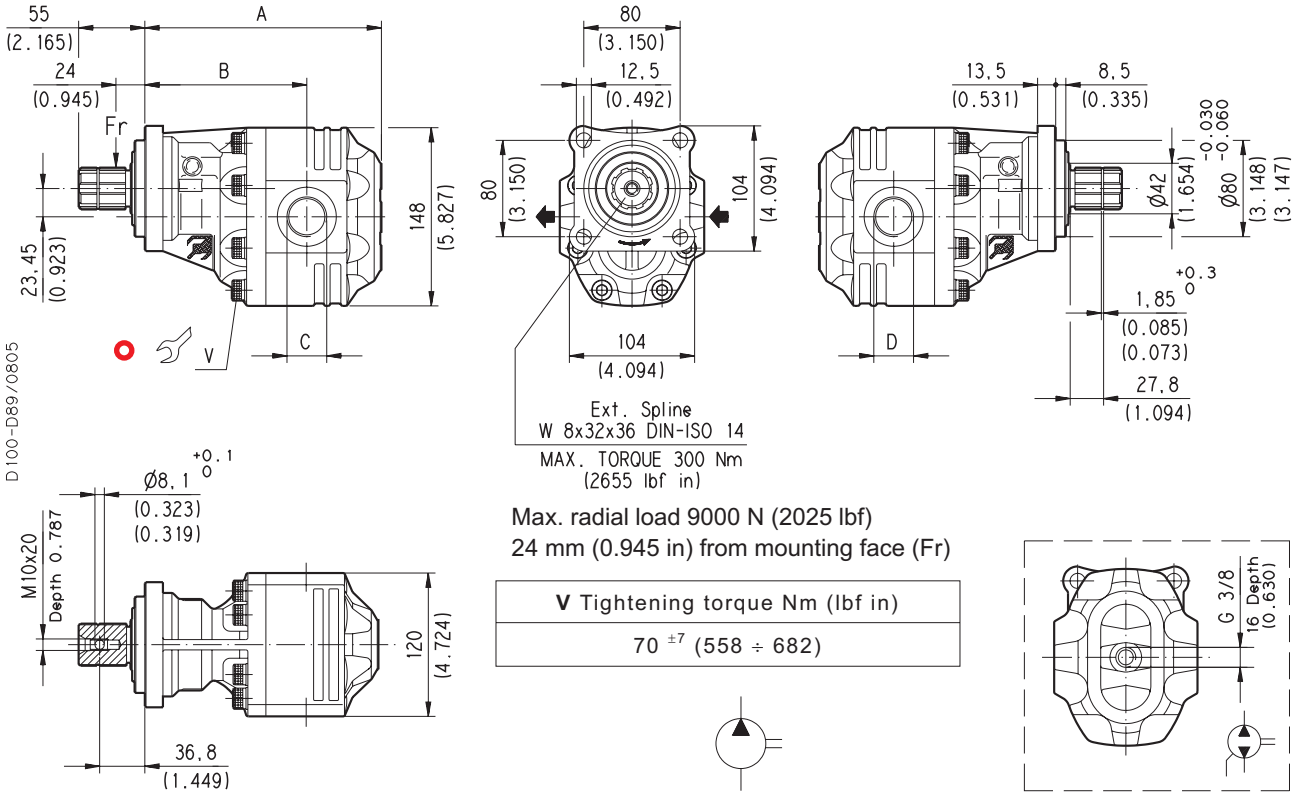

Max. radial load 9000 N (2025 lbf)
24 mm (0.945 in) from mounting face (Fr)

V Tightening torque Nm (lbf in)
70 ±7 (558 ÷ 682)

Multiple pumps available.
For the applications without radial load is available the light weight version without outboard bearing.
(For more information please consult our technical sales department).

Pump type				A	B	C	D	Mass
				mm (in)	mm (in)	IN	OUT	kg (lbs)
FP 30•17	S D R B	0-16 Z0	L GD/GD-N	168,5 (6.634)	118,5 (4.665)	G 1/2	G 1/2	10,65 (23.48)
FP 30•27			L GE/GE-N	174,5 (6.870)	124,5 (4.902)	G 3/4	G 3/4	11,10 (24.48)
FP 30•34				179,5 (7.067)	124,5 (4.902)			11,56 (25.49)
FP 30•38				182,5 (7.185)	127,5 (5.020)			12,10 (26.68)
FP 30•43				185,5 (7.303)	130,5 (5.138)			12,30 (27.12)
FP 30•51			L GF/GF-N	190,5 (7.500)	128,5 (5.059)	G 1	G 1	12,45 (27.45)
FP 30•61				196,5 (7.736)	134,5 (5.295)			13,00 (28.67)
FP 30•73				204,5 (8.051)	135,5 (5.335)			13,70 (30.21)
FP 30•82			L GG/GF-N	209,5 (8.248)	140,5 (5.531)	G 1 1/4		14,05 (30.98)
FP 30•100			L GG/GG-N	226,5 (8.917)	145,5 (5.728)		G 1 1/4	15,55 (34.29)
FP 30•125				242,5 (9.547)	161,5 (6.358)			17,05 (37.60)

Rotation: S=left - D=right - R=reversible - B=reversible internal drain

How to order:

FP 30•17 S0 - 16 Z0 - L GD/GD - N

01/08.05